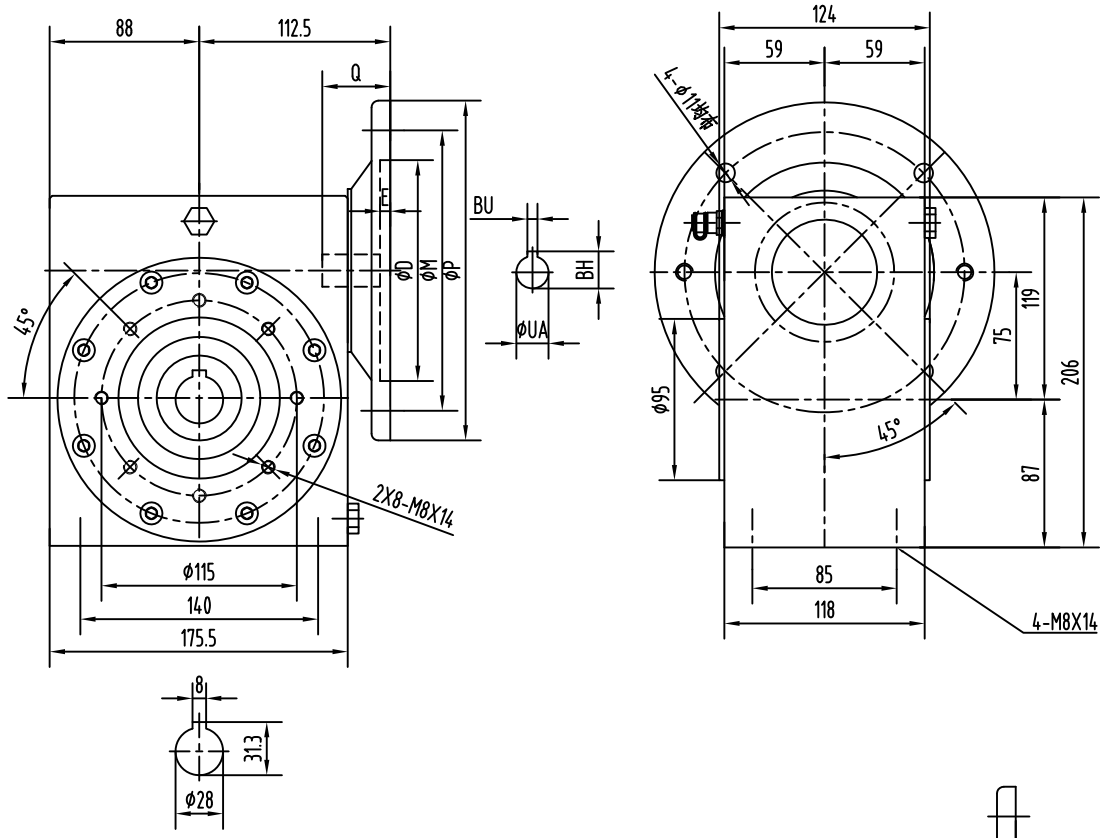

Motor flange mounting dimensions

Dim / Motor flange	D	M	P	d	BH	BU	E	Q	The hole diameter of shaft UA, Ratio i										
									7.5	10	15	20	25	30	40	50	60	80	100
100/112B5	180	215	250	14	31.3	8	6	57	28	28	28	-	-	-	-	-	-	-	-
100/112B14	110	130	160	9	31.3	8	6	57											
90B5	130	165	200	11	27.3	8	6	50	-	24	24	24	24	24	24	-	-	-	-
90B14	95	115	140	9	27.3	8	6	50											
80B5	130	165	200	11	21.8	6	6	40	-	-	-	-	19	19	19	19	19	19	19
80B14	80	100	120	6.6	21.8	6	6	40											

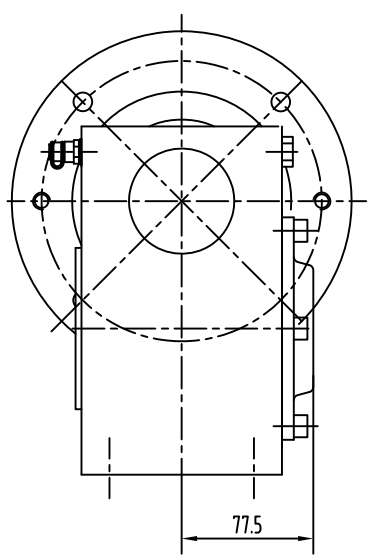

D-protective cover

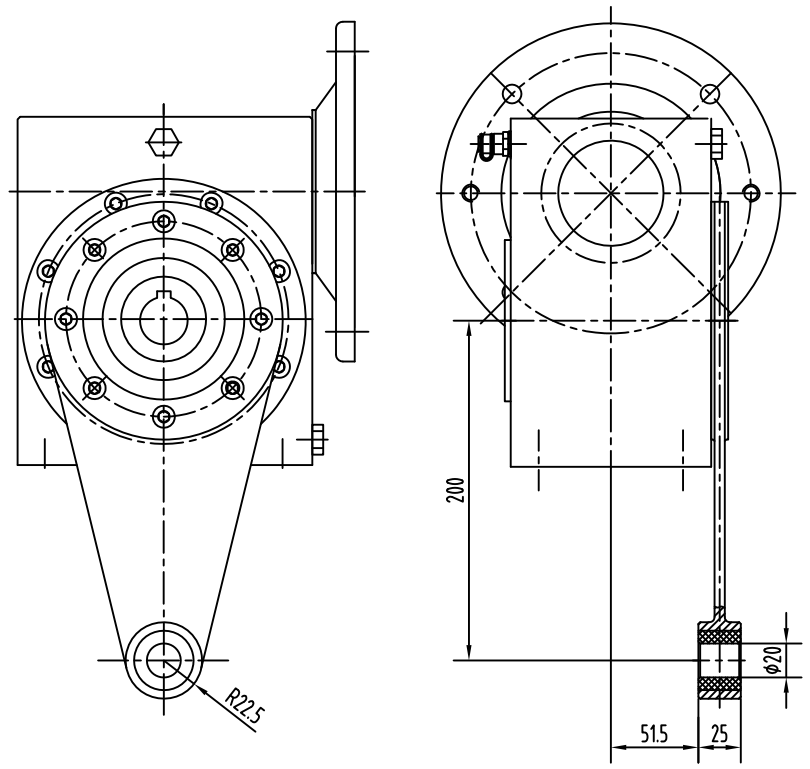

E-torque arm

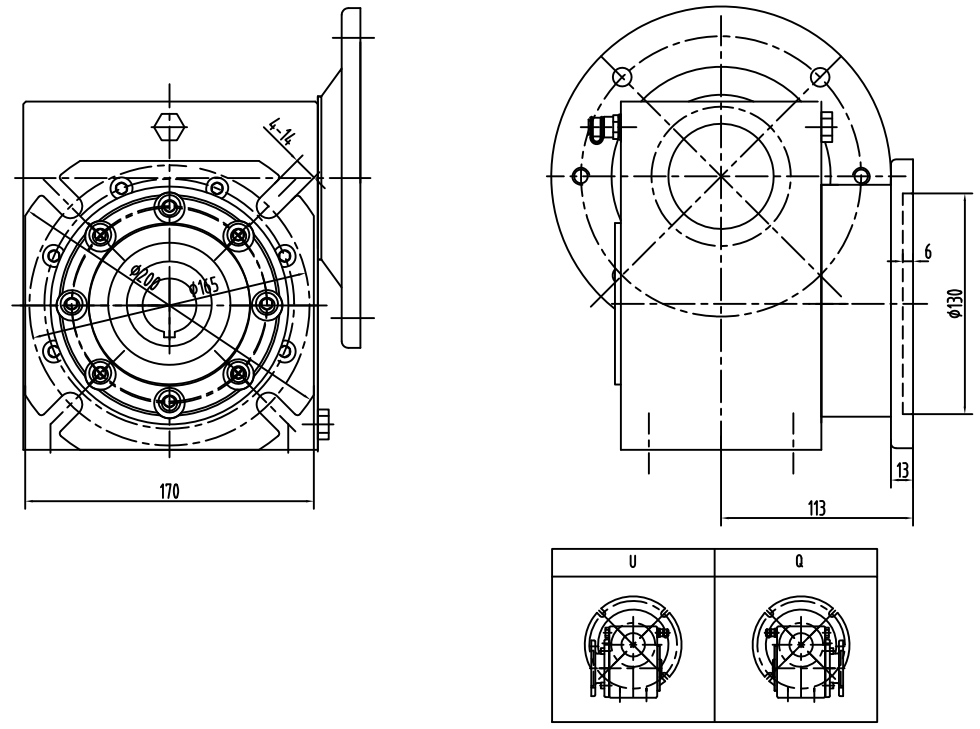

Output flange mounting dimensions

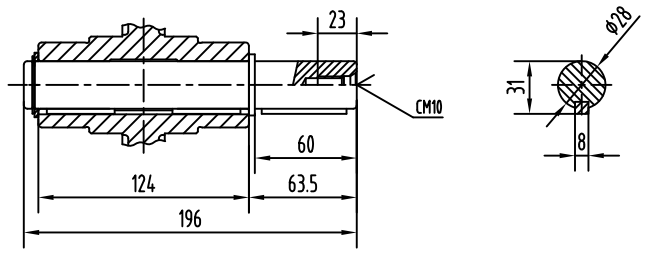

A-single output shaft

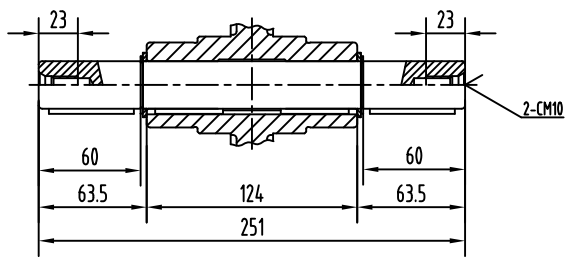

B-single output shaft

JDRIVE

SS Worm Gear