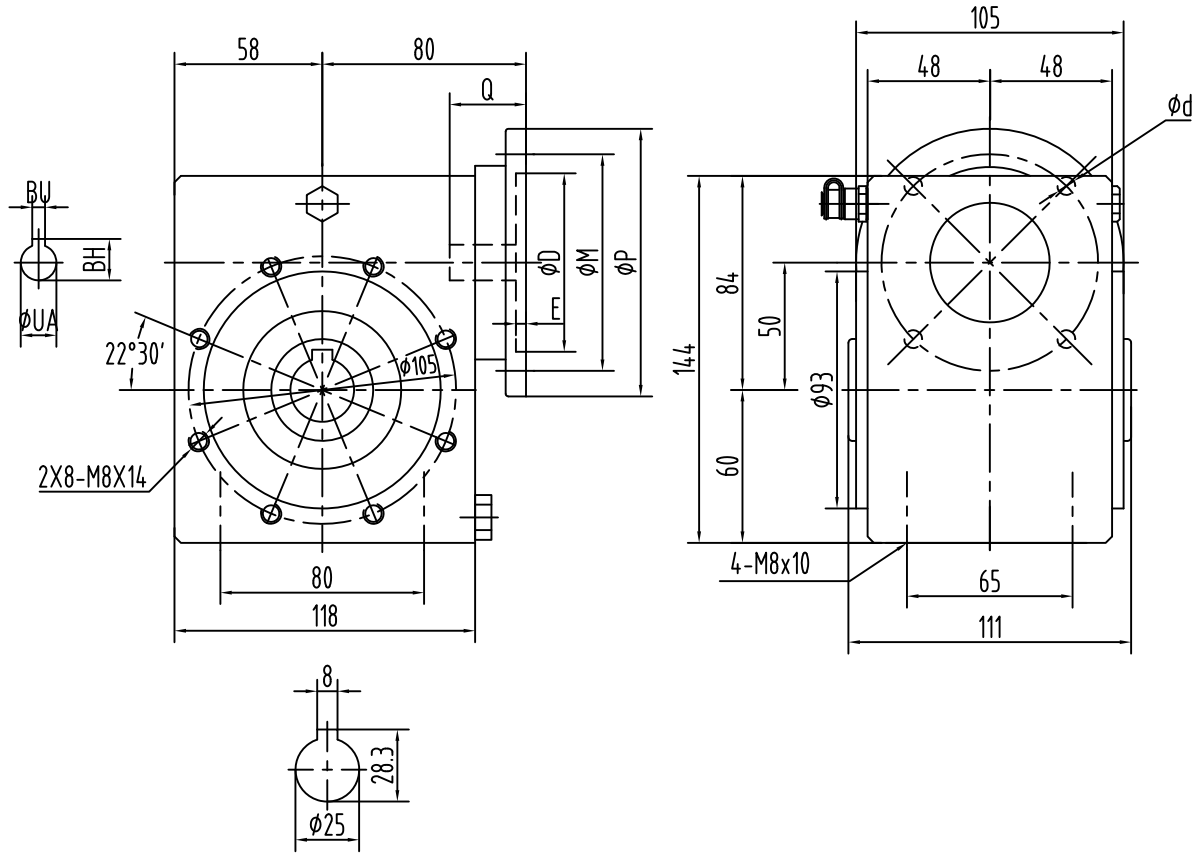

Motor flange mounting dimensions

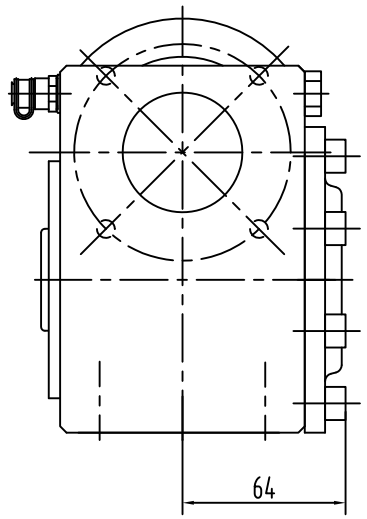

D-protective cover

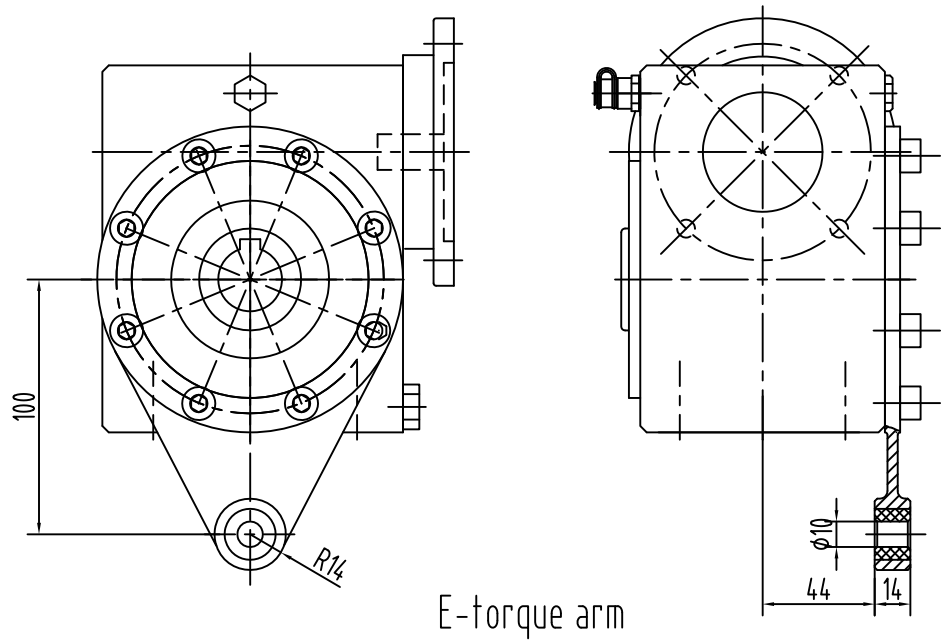

E-torque arm

Dim / Motor flange	D	M	P	d	BH	BU	E	Q	The hole diameter of shaft UA, Ratio i: 7.5	10	15	20	25	30	40	50	60	80	100
80B5	130	165	200	11	21.8	6	6	40	19	19	19	19	19	19	-	-	-	-	-
80B14	80	100	120	6.6	21.8	6	6	40											
71B5	110	130	160	9	16.3	5	6	30	-	14	14	14	14	14	14	14	14	14	-
71B14	70	85	105	6.6	16.3	5	4	30											
63B5	95	115	140	9	12.8	4	5	23	-	-	-	-	-	-	11	11	11	11	-

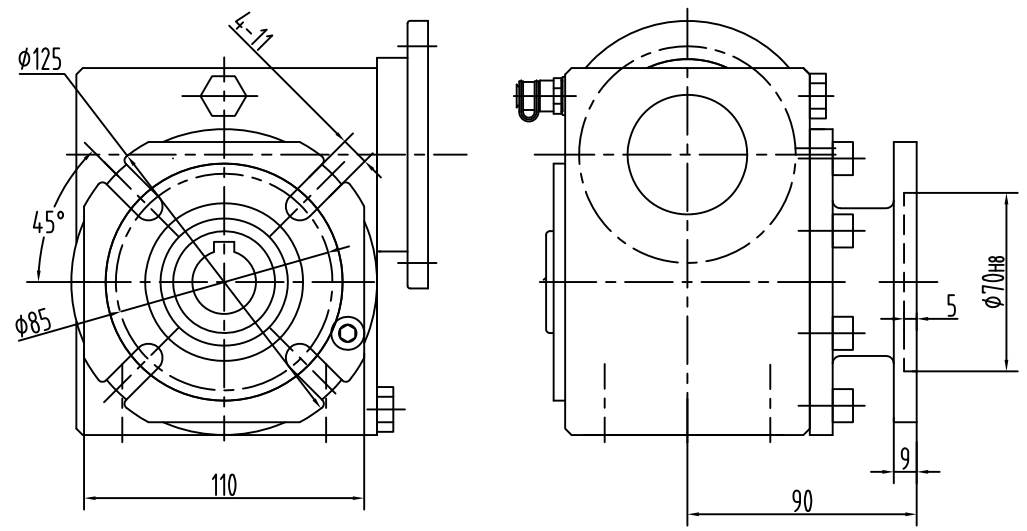

Output flange mounting dimensions

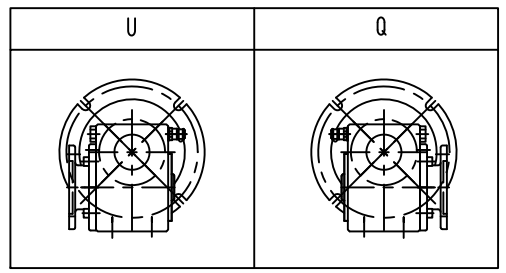

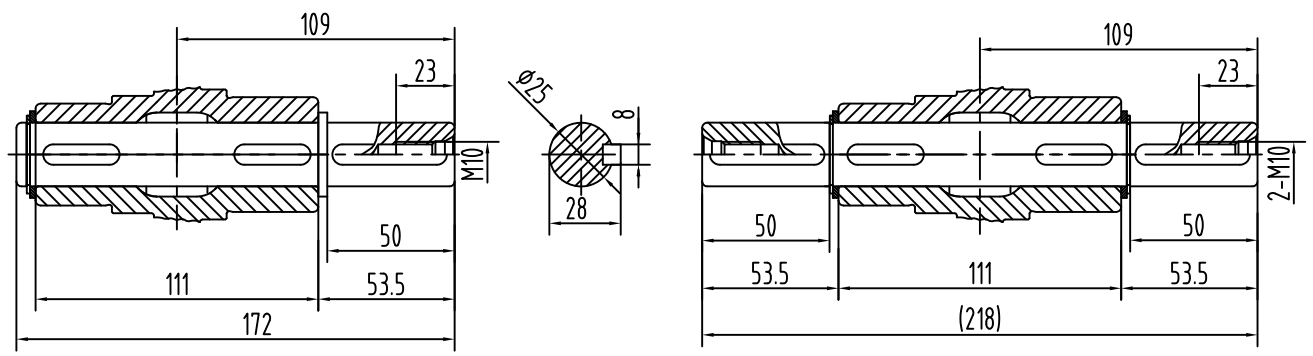

A-single output shaft

B-single output shaft

JDRIVE

SS Worm Gear