JRESSD40

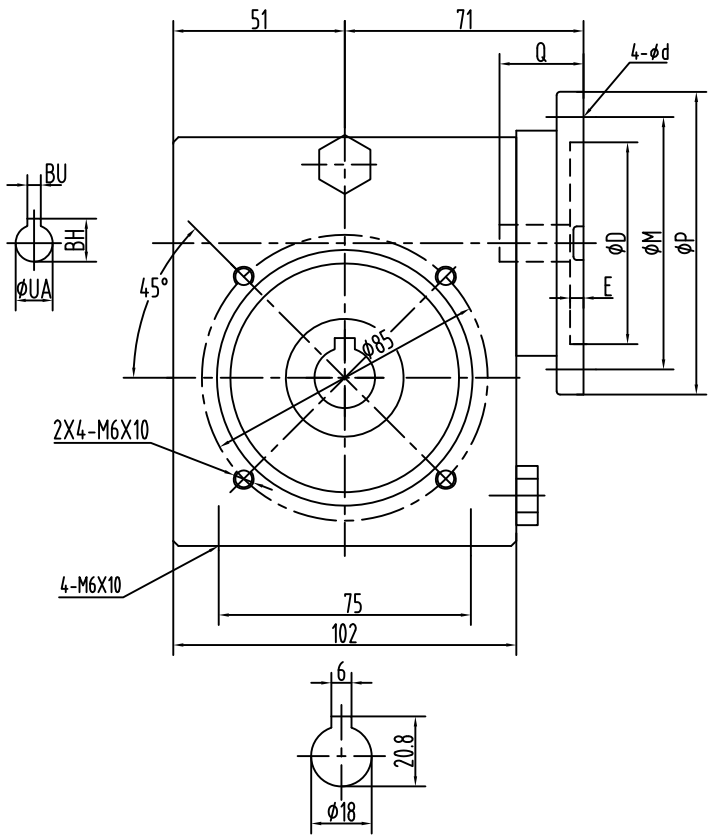

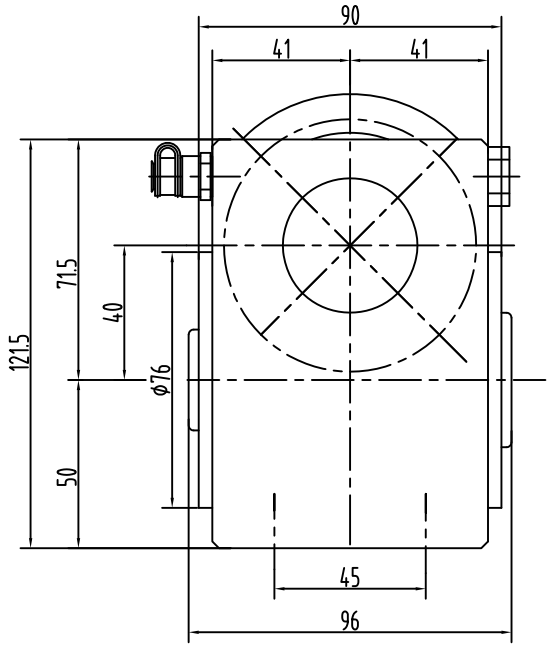

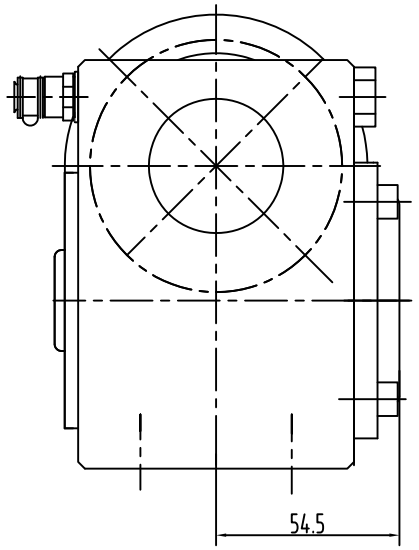

D-protective cover

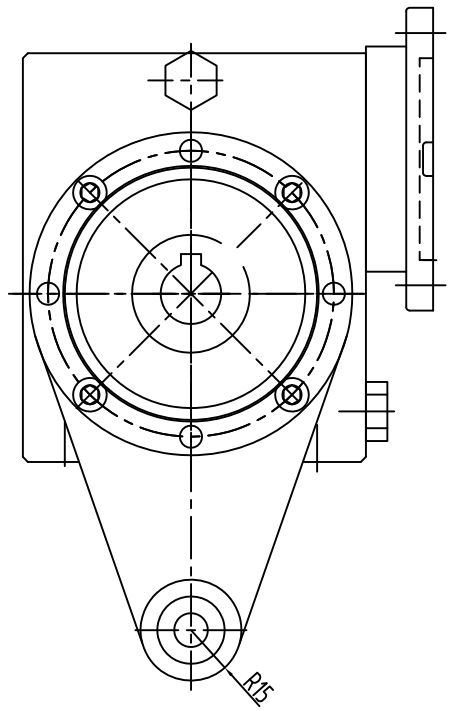

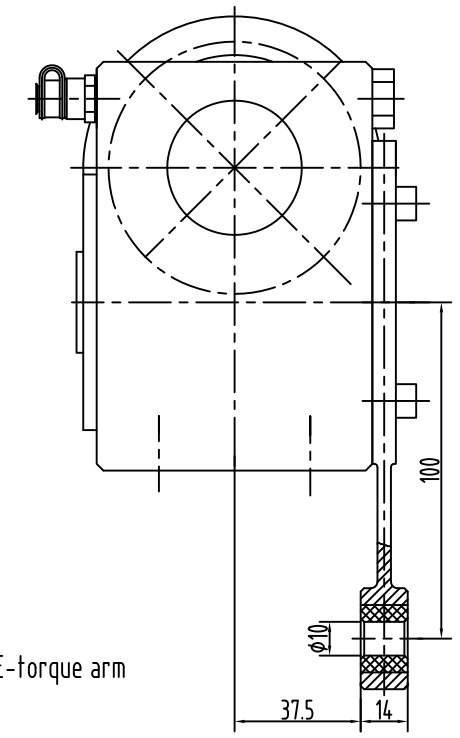

E-torque arm

Motor flange mounting dimensions

Dim / Motor flange	D	M	P	d	BH	BU	E	Q	The hole diameter of shaft UA, Ratio i										
									7.5	10	15	20	25	30	40	50	60	80	100
71B5	110	130	160	9	16.3	5	5	30	14	14	14	14	14	14	14	-	-	-	-
71B14	70	85	105	6.6	16.3	5	4	30											
63B5	95	115	140	9	12.8	4	5	23	-	-	-	11	11	11	11	11	11	11	-
63B14	60	75	90	5.5	12.8	4	4	23											
56B5	80	100	120	6.6	10.4	3	4	19	-	-	-	-	-	-	-	9	9	9	9

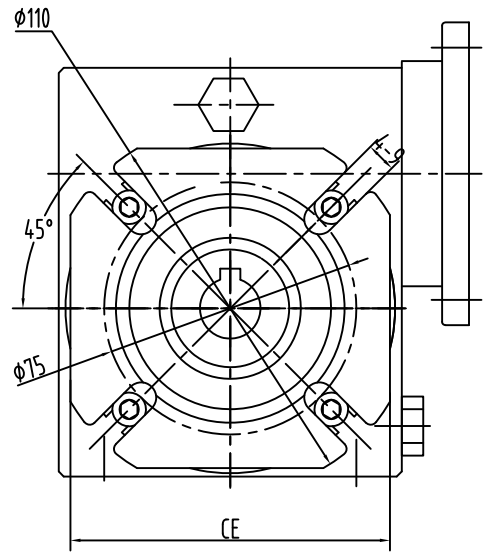

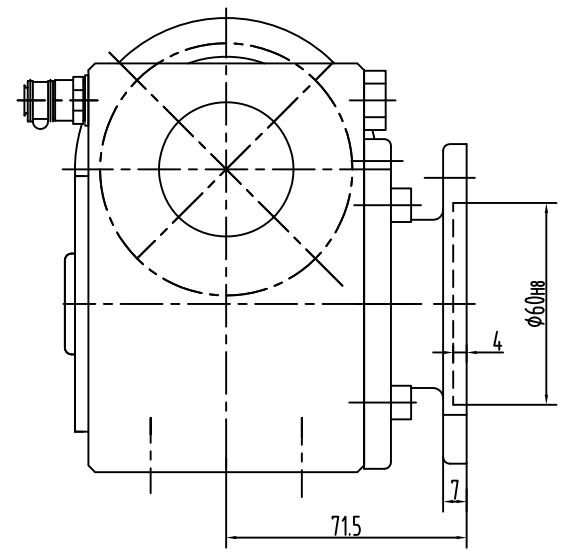

Output flange mounting dimensions

U	Q
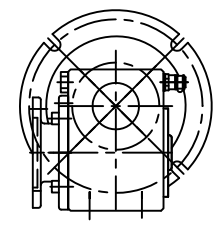	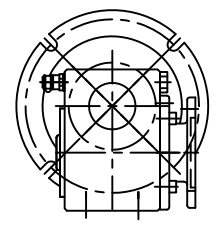

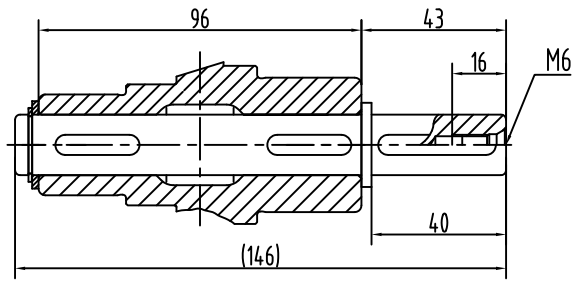

A-single output shaft

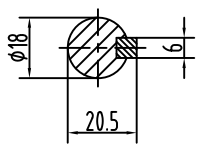

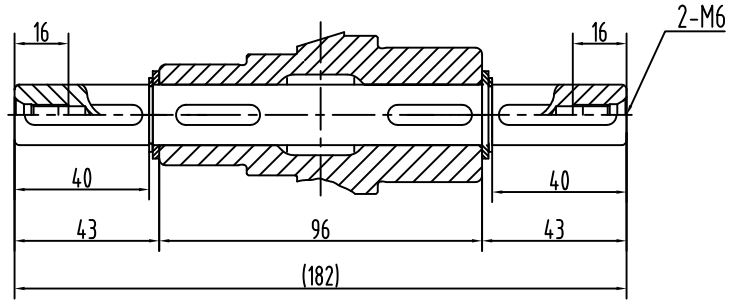

B-single output shaft

JDRIVE

SS Worm Gear