JRESSD30

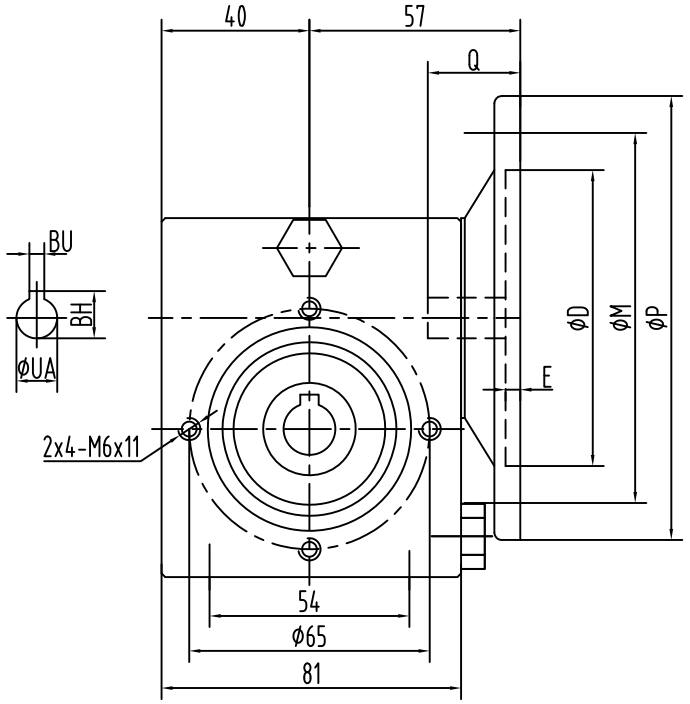

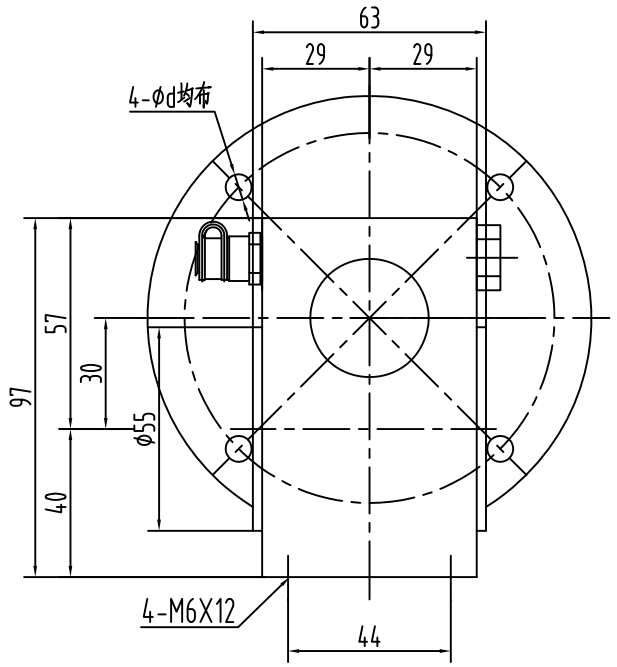

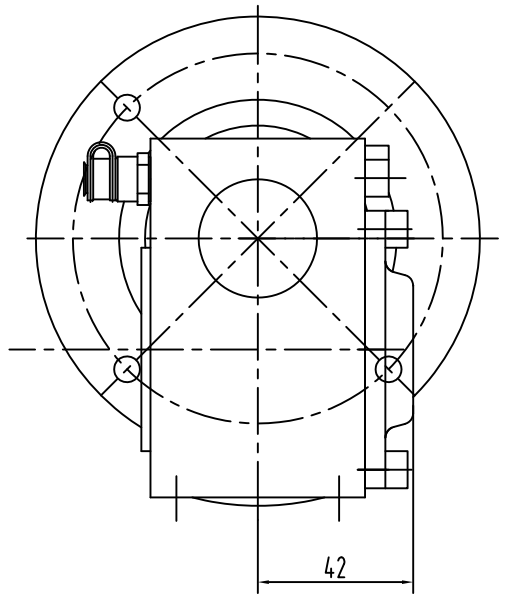

D-protective cover

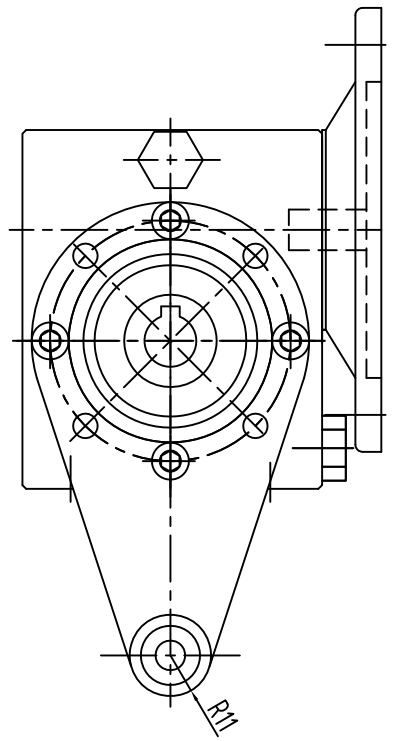

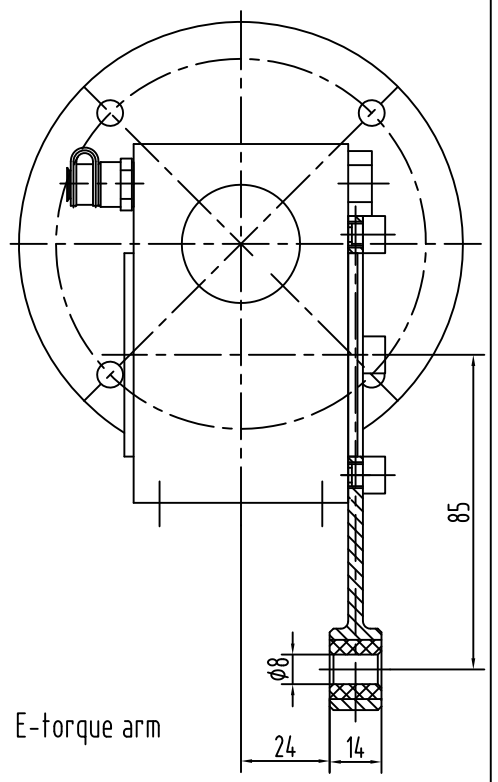

E-torque arm

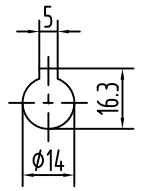

Motor flange mounting dimensions

Dim / Motor flange	D	M	P	d	BH	BU	E	Q	The hole diameter of shaft UA, Ratio i: 7.5	10	15	20	25	30	40	50	60	80
63B5	95	115	140	9	12.8	4	5	23	11	11	11	11	11	11	11	11	-	-
63B14	60	75	90	6	12.8	4	3.5	23										
56B5	80	100	120	7	10.4	3	4	19	9	9	9	9	9	9	9	9	9	9
56B14	50	65	80	6	10.4	3	3.5	19										

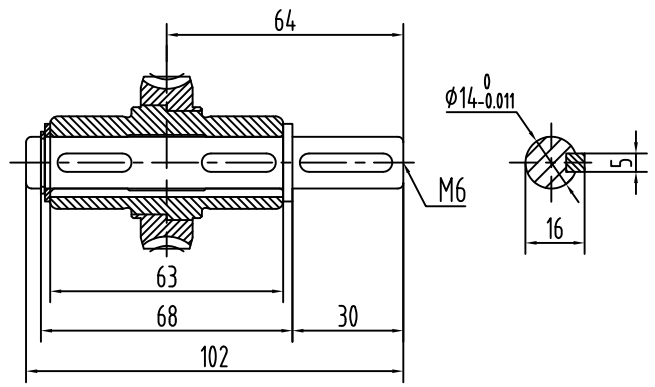

A-single output shaft

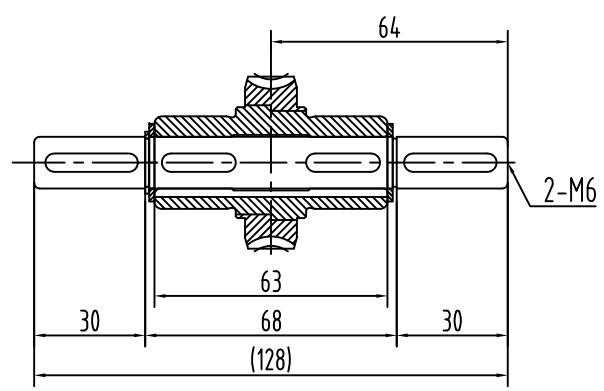

B-single output shaft

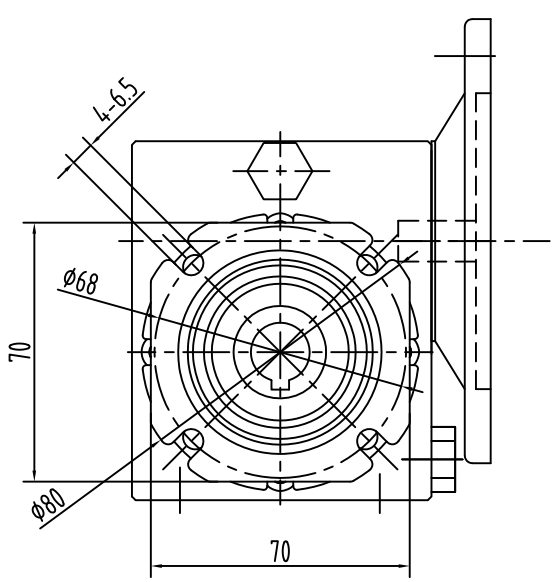

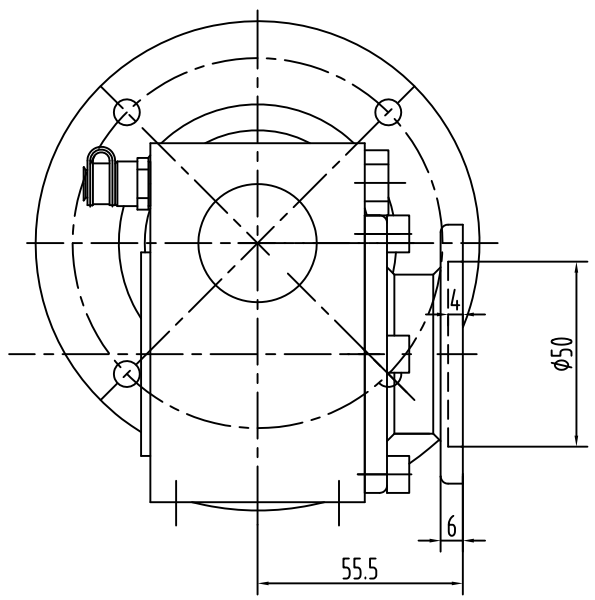

Output flange mounting dimensions

U	Q
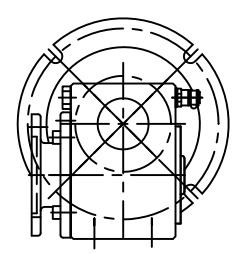	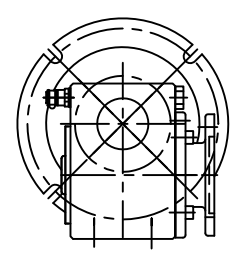

JDRIVE

SS Worm Gear