Model	JRESND63-140TC
Weight(Lb)	≈ 30

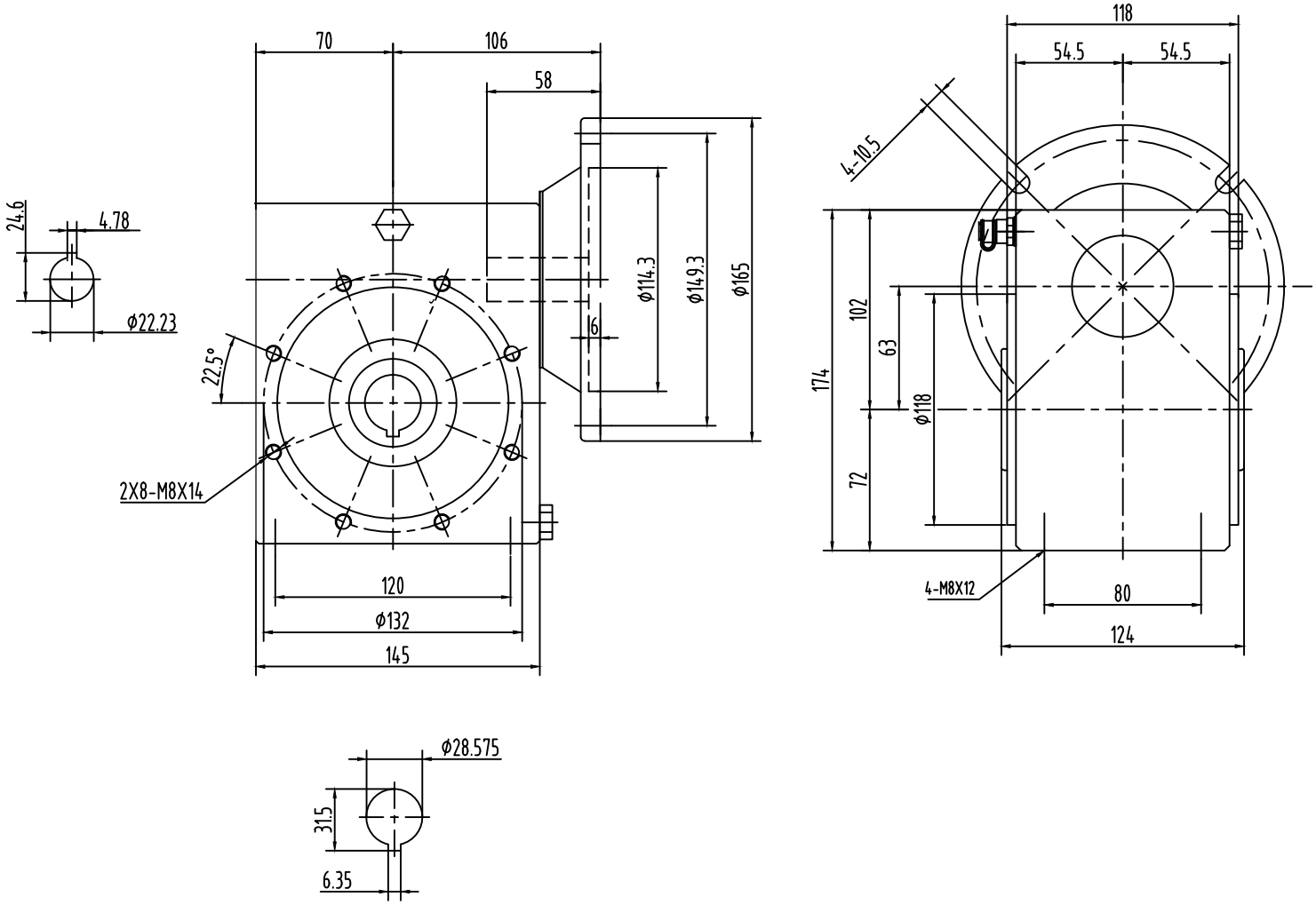

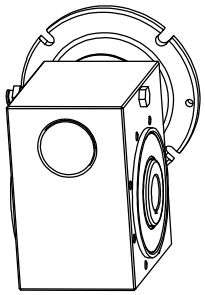

JIE ASIADRIVE

SS Worm Gear