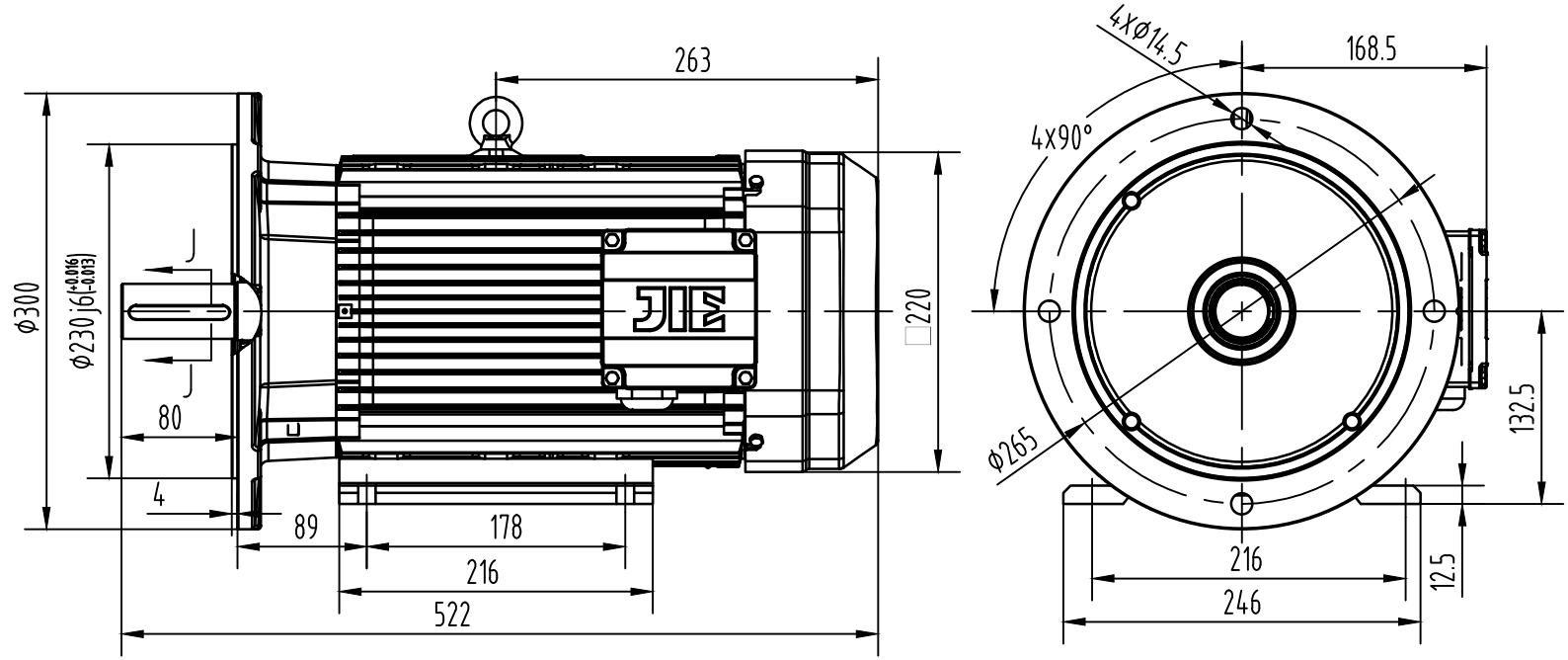

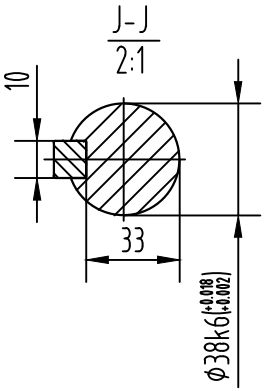

Outline		JIE ASIADRIVE
Design		
Check		
Standardized		Motor
Approved		
DWG. No.		DS132M4-IEC-B35
Date		