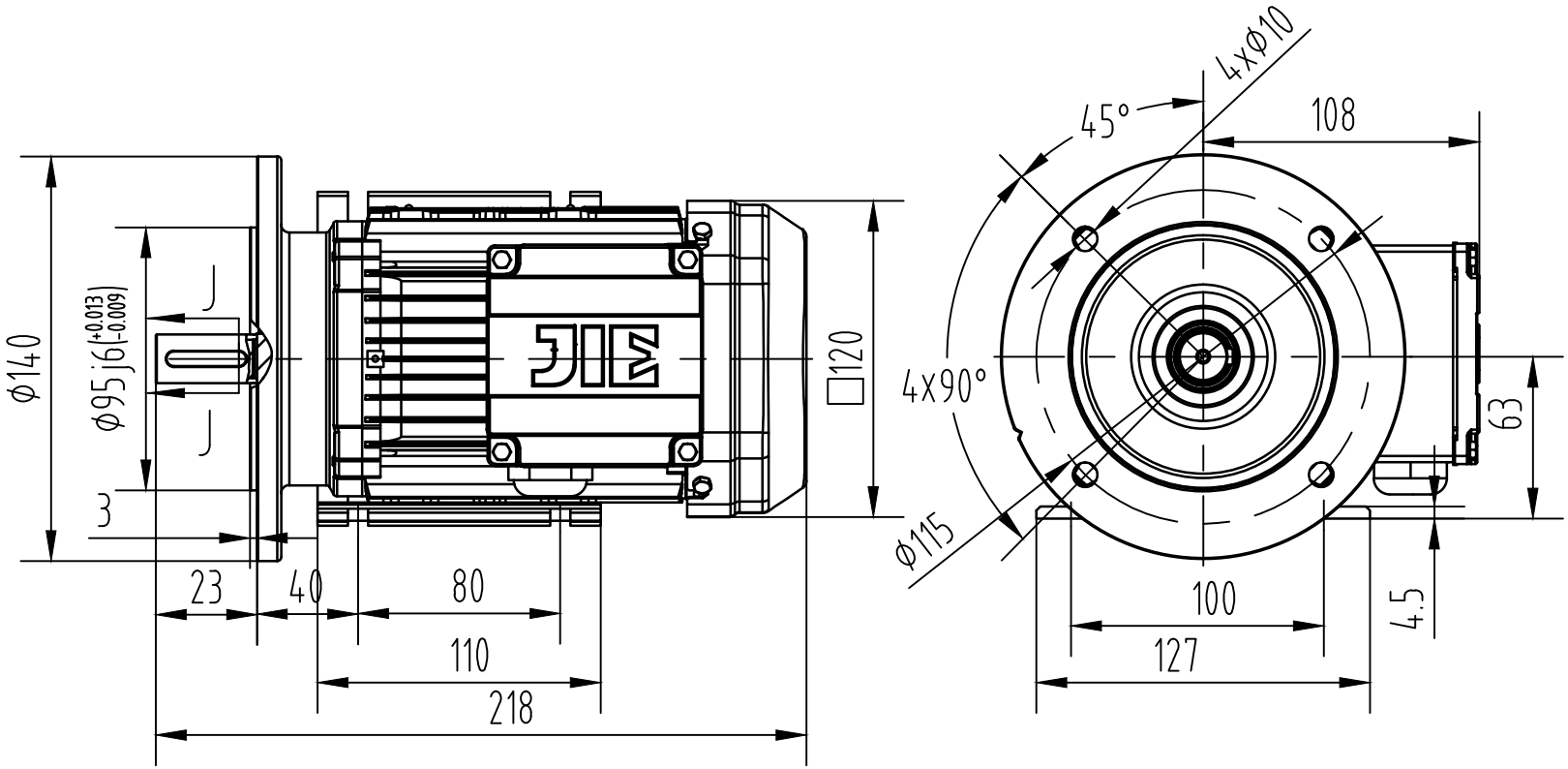

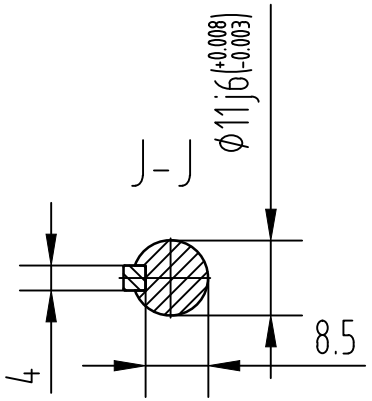

Outline		JIE ASIAD-TIVE
Design		
Check		
Standardized		Motor
Approved		
DWG. No.		DE63S/M/L4-IEC-B35
Date		